Pro-face

SCIENCE GATE
Your Automation Partner
SCIGATE AUTOMATION (S) PTE LTD
No.1 Bukit Batok Street 22 #01-01 Singapore 659592
Tel: (65) 6561 0488 Fax: (65) 6562 0588
Email: sales@scigate.com.sg Web: www.scigate.com.sg
Business Hours: Monday - Friday 8.30am - 6.15pm

Digital Human Machine Interface

Device/PLC Connection Manuals

About the Device/PLC Connection Manuals

Prior to reading these manuals and setting up your device, be sure to read the "Important: Prior to reading the Device/PLC Connection manual" information. Also, be sure to download the "Preface for Trademark Rights, List of Units Supported, How to Read Manuals and Documentation Conventions" PDF file. Furthermore, be sure to keep all manual-related data in a safe, easy-to-find location.

9.3 Intelligent Device Station

With CC-Link Intelligent Device Protocol units, when the same project file is used on multiple GP/GLC units, the system may malfunction. When using multiple GP/GLC units, create and maintain only one unique project file for each GP/GLC unit.

9.3.1 System Configuration

This section shows system configurations used when connecting Mitsubishi Electric PLCs and GP.

■ MELSEC-A Series

CPU	Link I/F	Cable Diagram	Cables	Unit	GP
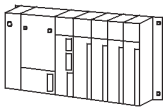					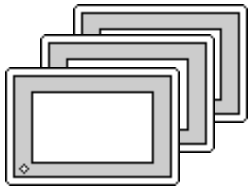
A1S, A1SH, A1SJ, A1SJH, A1SCPUC24-R2, A2S, A2SH, A2US, A2US-S1, A2USH-S1	A1SJ61BT11	<Cable Diagram 1>	Kurashige Denko's Twisted pair cable with shield Model: FANC-SB 0.5 mm2 × 3 or FANC-SBH 0.5 mm2 × 3 or FANC-SB110H	CC-Link unit (MFP1) model: GP077R-CL11	GP Series *1
A0J2H, A1N, A2N, A2N-S1, A3N, A3M, A3H, A2A, A2A-S1, A3A, A2U, A2U-S1, A3U, A4U	AJ61BT11				

**1 The GP/GLC series applicable for CC-Link Intelligent Device Station are listed on the following page:*

Series Name		Product Name	Unit
GP70 Series	GP-377 Series	GP-377L	CC-Link compatible unit *1
		GP-377S	
GP77R Series	GP-377R Series	GP-377RT	
	GP-477R Series	GP-477RE	
	GP-577R Series	GP-577RS	
		GP-577RT	
GP2000 Series	GP-2300 Series	GP-2300L	
		GP-2300T	
	GP-2301 Series	GP-2301L	
		GP-2301S	
		GP-2301T	
	GP-2400 Series	GP-2400T	
	GP-2401 Series	GP-2401T	
	GP-2500 Series	GP-2500T	
	GP-2501 Series	GP-2501S	
		GP-2501T	
	GP-2600 Series	GP-2600T	
	GP-2601 Series	GP-2601T	
GLC2000 Series	GLC2300 Series	GLC2300L	
		GLC2300T	
	GLC2400 Series	GLC2400T	
	GLC2500 Series	GLC2500T	
	GLC2600 Series	GLC2600T	

**1 When using GP-477R/GP-577R series units, the GLC bus conversion unit (GLC300-BCB11) is required.*

When using GP2000/GLC2000 series units, the bus conversion unit (PSM-CONV00) is required.

■ MELSEC-QnA Series

CPU	Link I/F	Cable Diagram	Cables	Unit	GP
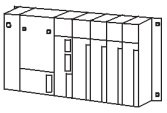					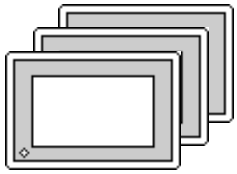
Q2AS Q2ASH	A1SJ61QBT11	<Cable Diagram 1>	Kurashige Denko's Twisted pair cable with shield Model: FANC-SB 0.5 mm2 × 3 or FANC-SBH 0.5 mm2 × 3 or FANC-SB110H	CC-Link unit (MFP1) GP077R-CL11	GP Series *1
Q2A Q2A-S1 Q3A Q4A Q4AR	AJ61QBT11				

**1 The GP/GLC series applicable for CC-Link Intelligent Device Station listed below:*

Series Name		Product Name	Unit
GP70 Series	GP-377 Series	GP-377L	CC-Link compatible unit *1
		GP-377S	
GP77R Series	GP-377R Series	GP-377RT	
	GP-477R Series	GP-477RE	
	GP-577R Series	GP-577RS	
		GP-577RT	
GP2000 Series	GP-2300 Series	GP-2300L	
		GP-2300T	
	GP-2301 Series	GP-2301L	
		GP-2301S	
		GP-2301T	
	GP-2400 Series	GP-2400T	
	GP-2401 Series	GP-2401T	
	GP-2500 Series	GP-2500T	
	GP-2501 Series	GP-2501S	
		GP-2501T	
	GP-2600 Series	GP-2600T	
	GP-2601 Series	GP-2601T	
GLC2000 Series	GLC2300 Series	GLC2300L	
		GLC2300T	
	GLC2400 Series	GLC2400T	
	GLC2500 Series	GLC2500T	
	GLC2600 Series	GLC2600T	

**1 When using GP-477R/GP-577R series units, the GLC bus conversion unit (GLC300-BCB11) is required.*

When using GP2000/GLC2000 series units, the bus conversion unit (PSM-CONV00) is required.

■ MELSEC-Q Series

CPU	Link I/F	Cable Diagram	Cables	Unit	GP
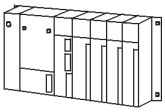					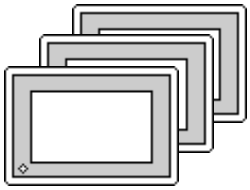
Q00CPU Q01CPU Q00JCPU Q02CPU Q02HCPU Q06HCPU Q12HCPU Q25HCPU	QJ61BT11	<Cable Diagram 1>	Kurashige Denko's Twisted pair cable with shield Model: FANC-SB 0.5 mm^2 × 3 or FANC-SBH 0.5 mm^2 × 3 or FANC-SB110H	CC-Link unit (MFP1) GP077R-CL11	GP Series
Q02CPU-A Q02HCPU-A Q06HCPUA-A	A1SJ61BT11				

**1 The GP/GLC series applicable for CC-Link Intelligent Device Station listed below:*

Series Name		Product Name	Unit
GP70 Series	GP-377 Series	GP-377L	CC-Link compatible unit *1
		GP-377S	
GP77R Series	GP-377R Series	GP-377RT	
	GP-477R Series	GP-477RE	
	GP-577R Series	GP-577RS	
		GP-577RT	
GP2000 Series	GP-2300 Series	GP-2300L	
		GP-2300T	
	GP-2301 Series	GP-2301L	
		GP-2301S	
		GP-2301T	
	GP-2400 Series	GP-2400T	
	GP-2401 Series	GP-2401T	
	GP-2500 Series	GP-2500T	
	GP-2501 Series	GP-2501S	
		GP-2501T	
	GP-2600 Series	GP-2600T	
	GP-2601 Series	GP-2601T	
GLC2000 Series	GLC2300 Series	GLC2300L	
		GLC2300T	
	GLC2400 Series	GLC2400T	
	GLC2500 Series	GLC2500T	
	GLC2600 Series	GLC2600T	

**1 When using GP-477R/GP-577R series units, the GLC bus conversion unit (GLC300-BCB11) is required.*

When using GP2000/GLC2000 series units, the bus conversion unit (PSM-CONV00) is required.

■ Network Connection Example

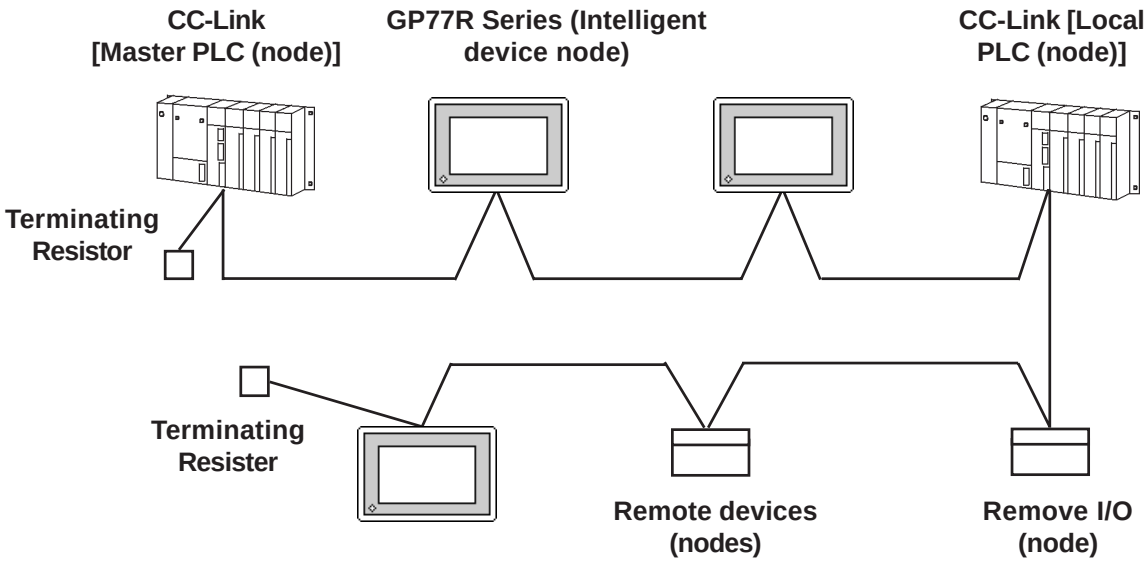

◆Number of Connectable Units

All GP units connected to the master PLC (node) have the following operation conditions:

1. {(1 X a)+(2 X b)+(3 X c)+(4 X d)} ≦ 64
   - a: Number of units occupying 1 node
   - b: Number of units occupying 2 nodes
   - c: Number of units occupying 3 nodes
   - d: Number of units occupying 4 nodes
2. {(16 X A)+(54 X B)+(88 X C)} ≦ 2304
   - A: Number of remote I/O nodes ≦ 64
   - B: Number of remote device nodes ≦ 42
   - C: Number of local and intelligent device nodes ≦ 26

◆Maximum number of connectable GPs

The GP will become an intelligent device node. Also, the minimum number of occupying nodes is 1. As a result, the number of GPs that can be connected to a single master node is 26.

For more detailed information about master node system design, refer to the following manuals' system design chapter:
Mitsubishi Electric:

- **AJ61BT11/A1SJ61BT11 Unit CC-Link System Master and Local Unit User's Manual (Details)**
- **AJ61QBT11/A1SJ61QBT11 Unit CC-Link System Master and Local Unit User's Manual (Details)**
- **QJ61BT11 Unit CC-Link System Master and Local Unit User's Manual (Details)**

- ***The transient transmission is processed more slowly than the cyclic transmission. If fast processing is required, use the cyclic transmission.***

9.3.2 Cable Diagram

Although the cable diagram shown below and those recommended by the Mitsubishi Electric Corp. may differ, using these cables for connection will not cause any problems.

■ Recommended Cables

The recommended cables are as follows:

CC-Link cable: **Kurashige Denko FANC-SB 0.5 mm^2 X 3**

CC-Link High cable: **Kurashige Denko FANC-SBH 0.5 mm^2 X 3**

CC-Link cable (New Type): **Kurashige Denko FANC-SB110H**

Important

- ***Be sure to use only CC-Link cables.***
- ***CC-Link cables and CC-Link high performance cable, cannot be used simultaneously.***
- ***For details about T-junction connections, refer to Mitsubishi Electric CC-Link Master Unit Manual.*[*1]**

**1 Mitsubishi Electric manuals:*

- *AJ61BT11/A1SJ61BT11 Unit CC-Link System Master and Local Unit User's Manual (Details)*
- *AJ61QBT11/A1SJ61QBT11 Unit CC-Link System Master and Local Unit User's Manual (Details)*
- QJ61BT11 Unit CC-Link System Master and Local Unit User's Manual *(Details)*

Cable Diagram 1

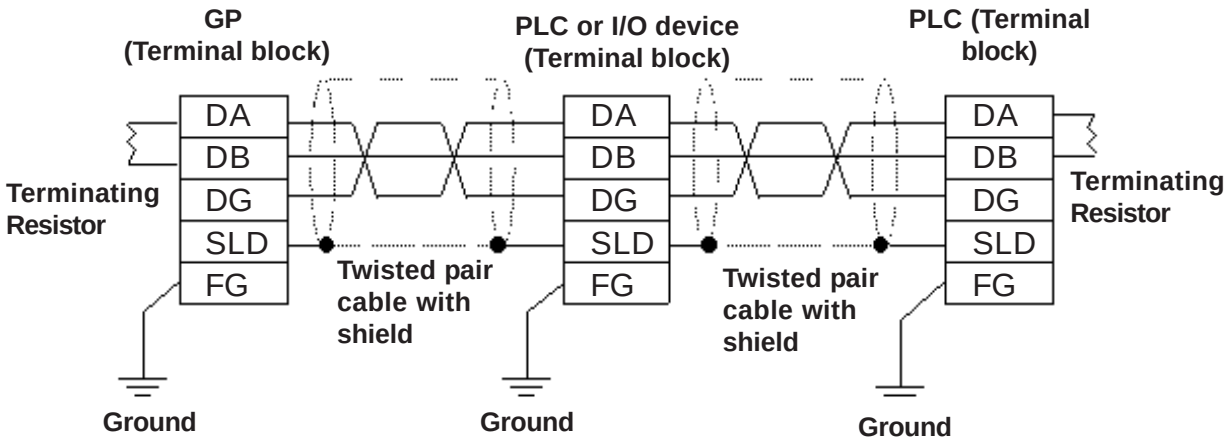

Note:

- **Connect the shield wires to each unit's SLD terminal.**

  The SLD terminal is connected internally be connected to the FG terminal. Use a grounding method applicable to your area's regulations and laws.

- **Insert the Master Unit's terminating resistor at both ends of the data link (between DA and DB). Be aware that terminating resistance value of the CC-Link cable will differ from that of the CC-Link high performance cable.**
- **For more detailed information about terminating resistance values and cable lengths, refer to Mitsubishi Electric CC-Link Master Unit Manual.*1**

9.3.3 Supported Devices

The following lists show the range of devices supported by the GP.

Note: **Each device's address range may differ depending on your CPU model. For each CPU device range, refer to Mitsubishi Electric PLC manuals.**

■ MELSEC-A/QnA/Q Series (Common for All Series Units) (Cyclic Transmission)

Device	Bit Address	Word Address	Particulars	
Remote input	RX000 ~ RX7FF	RX000 ~ RX7F0	***0 *1	L/H
Remote output	RY000 ~ RY7FF	RY000 ~ RY7F0	***0	
Remote resistor	RWw000 ~ RWwFFF	RWw00 ~ RWwFF		
Remote resistor	RWr000 ~ RWrFFF	RWr00 ~ RWrFF	*1	

**1 Data cannot be written from the GP. Only data read can be performed. "RX", "RY", "RWx", and "RWw" are the names used on the GP. On the master node, these assigned names will become opposite.*

	Assigned Name			
GP	RX	RY	RWw	RWr
PLC	RY	RX	RWr	RWw

■ MELSEC-A Series (Transient transmission)

Setup System Area or Communication Information's Storing Address here.

Device	Bit Address	Word Address	Particulars	
Input relay	X0000 ~ X1FFF	X0000 ~ X1FF0	***0	L/H
Output relay	Y0000 ~ Y1FFF	Y0000 ~ Y1FF0	***0	
Internal relay	M0000 ~ M8191	M0000 ~ M8191	÷16	
Special relay	M9_000 ~ M9_255	M9_000 ~ M9_240	÷16	*1
Retain relay	L0000 ~ L8191	L0000 ~ L8176	÷16	
Link relay	B0000 ~ B1FFF	B0000 ~ B1FF0	***0	
Timer (contact)	TS0000 ~ TS2047	TS0000 ~ TS2032	÷16	
Timer (coil)	TC0000 ~ TC2047	TC0000 ~ TC2032	÷16	
Counter (contact)	CS0000 ~ CS1023	CS0000 ~ CS1008	÷16	
Counter (coil)	CC0000 ~ CC1023	CC0000 ~ CC1008	÷16	
Timer (current value)	---------	TN00000 ~ TN2047	Bit15	
Counter (current value)	---------	CN0000 ~ CN1023	Bit15	
Data register	---------	D0000 ~ D8191	Bit15	
Special register	---------	D9_000 ~ D9_255	Bit15	*2
Link register	---------	W0000 ~ W1FFF	BitF	
File register	---------	R0000 ~ R8191	Bit15	

**1 When designating special relay devices, select "M9_" in the screen editor.*

**2 When designating special register devices, select "D9_" in the screen editor.*

Note:

Annunciator devices are inaccessible.

E-tag or K-tag indirect addresses cannot be designated.

■ MELSEC-QnA/Q Series (Transient transmission)

Setup System Area or Communication Information's Storing Address here.

Device	Bit Address	Word Address	Particulars	
Input relay	X0000 ~ X1FFF	X0000 ~ X1FF0	***0	
Output relay	Y0000 ~ Y1FFF	Y0000 ~ Y1FF0	***0	
Internal relay	M0000 ~ M32767	M0000 ~ M32752	÷16	
Special relay	SM0000 ~ SM2047	SM0000 ~ SM2032	÷16	
Latch relay	L0000 ~ L32767	L0000 ~ L32752	÷16	
Link relay	B0000 ~ B7FFF	B0000 ~ B7FF0	***0	
Special link relay	SB000 ~ SB7FF	SB000 ~ SB7F0	***0	
Timer (contact)	TS00000 ~ TS23087	TS00000 ~ TS23072	÷16	
Timer (coil)	TC00000 ~ TC23087	TC00000 ~ TC23072	÷16	
Totaling timer (contact)	SS00000 ~ SS23087	SS00000 ~ SS23072	÷16	
Totaling timer (coil)	SC00000 ~ SC23087	SC00000 ~ SC23072	÷16	L/H
Counter (contact)	CS00000 ~ CS23087	CS00000 ~ CS23072	÷16	
Counter (coil)	CC00000 ~ CC23087	CC00000 ~ CC23072	÷16	
Timer (current value)	---------	TN00000 ~ TN23087	Bit15	
Totaling timer (current value)	---------	SN00000 ~ SN23087	Bit15	
Counter (current value)	---------	CN00000 ~ CN23087	Bit15	
Data register	---------	D00000 ~ D25983	Bit15	
Special register	---------	SD0000 ~ SD2047	Bit15	
Link register	---------	W0000 ~ W657F	BitF	
Special link register	---------	SW000 ~ SW7FF	BitF	
File register	---------	R0000 ~ R32767	Bit15	

Note: Annunciator, Edge relay, and Step relay devices are not accessible.
E-tag or K-tag indirect addresses cannot be designated.

Note: **When performing Part and tag settings via GP-PRO/PB III for Windows, designate the PLC node number at the same time as entering addresses. (The default value used when the software starts is "0".)**

When using cyclic transmission, node number settings are unnecessary.

Reference *Reference: For the devices on which cyclic transmission can be performed, refer to 9.3.3 Supported Devices, MELSEC-A/QnA/Q Series (Common for All Series Units) (Cyclic Transmission).*

<e.g.> When a device address is "X0000":
Enter "X" for the device name, and "0000" for the address.

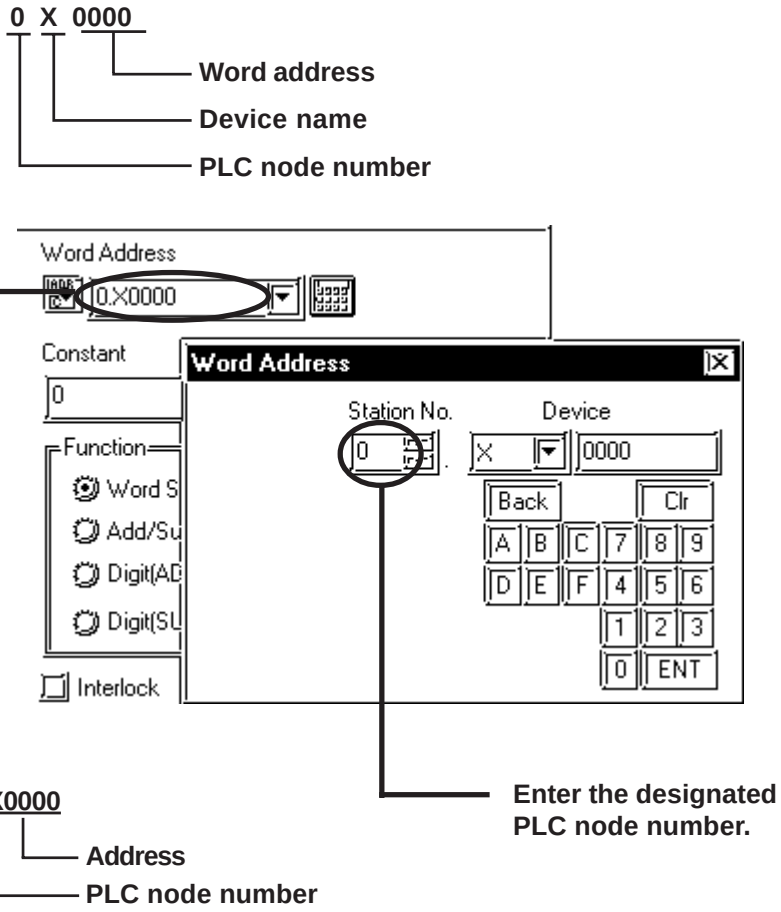

■ CC-Link Intelligent Device Station Limitations

CC-Link intelligent Device Station have the following limitations.

◆ Device Addresses and Nodes Connection Limitations

When a block's size limit (1024: 1K) is exceeded, or a different node's device address is used, GP unit internal records are used to set device addresses. These records are limited to 64.

For example, when the D0 device address is set, a single record is used in the GP. For detailed examples, refer to the following chart.

E.x. 1)
Number of records used when performing the following tag settings:

Setting No.	Setting Node No.	Device Address	Remaining Number of Records in GP-PRO/PB III	Remarks
1	1	D0	63	Uses one record
2	1	D1024	62	Uses one record
3	2	D0	61	Uses one record
4	2	D1024	60	Uses one record
5	2	R0	60	Since the node number and address range already exist as setting No. 3, no records will be used.
6	2	R1024	60	Since the node number and address range already exist as setting No. 4, no records will be used.
7	2	D2048	59	Uses one record
8	3	D2048	58	Uses one record
9	3	D2049	58	Since the node number and address range already exist as setting No. 8, no records will be used.

Also, if a different node number is used, or the size of an address exceeds the block limit of 1024 (1KB), a GP internal record is used. However, if only the device name is changed, or if the new address range used is the same size as the previously set range, a record will not need to be used.

Ex. 2)

When setting data resister up to D16384 as well as setting addresses in a block (1024: 1K) via tag settings, 16 internal records will be used.

16384÷1024 =16

Therefore, when performing the same amount of tag settings for each node, settings can be performed for only a total of 4 nodes.

* When the number of internal records exceeds 64, the following error message will appear on the GP screen editor software:

"The number of device addresses has exceeded the upper limit. Cannot perform any more settings.

◆ PLC Device Block Write and Block Read Out Restrictions

The GP unit processes data internally by separating data into blocks of 1024 words.

Therefore, when a Block Write is requested that uses 41 or more words and will exceed the 1024 word limit,

the following features cannot be used.

- PLC Device Write using D-Script's Memory Operation Feature

- Write from GP/GLC SRAM to PLC Device using Filing Feature

- Write to LS Area's Read Area

- Tag, D-Script Offset Value setting.

If the above problem occurs, separate the data so that the number of words used by the Block Write is 1024 or less.

<Cyclic Transmission>

All remote input/output and remote register data that has been allocated to the master node via the CC-Link parameter settings, can be read.

From this data, only RX and RWr allocated to the GP via the master node can be written from the GP. (These names will become RY and RWw on the GP.)

■ Number of Bits Allocable to the GP

Device	Number of Nodes Occupied		Remark
	1 Node	4 Nodes	
Remote input (RX)	32 bits	128 bits	No. of bits
Remote output (RY)	32 bits	128 bits	No. of bits
Remote register (RWr)	4 words	16 words	No. of word
Remote register (RWw)	4 words	16 words	No. of word

■ Remote Input/Output Signals (Individual to Master Nodes)

The following data explains the GP's individual node input/output signal allocation. There are two signal allocation, methods: using or not using remote READY flag or not using it. Also, the input/output signal will vary depending on the set number of occupying nodes (1 node/4 nodes).

◆ When remote READY flag (default) is not used:

The "n" character used in the following table reflects the address number used for each node by the master node.

Signal Direction: GP -> Master Node			Signal Direction: Master Node -> GP		
Device No.		Signal Name	Device No.		Signal Name
Number of Occupying Nodes			Number of Occupying Nodes		
1 Node	4 Nodes		1 Node	4 Nodes	
RYn0 ~ RYnF	RYn0 ~ RY(n+6)F	User area	RXn0 ~ RXnF	RXn0 ~ RX(n+6)F	User area
RY(n+1)0 ~ RY(n+1)C	RY(n+7)0 ~ RY(n+7)C		RX(n+1)0 ~ RX(n+1)C	RX(n+7)0 ~ RX(n+7)C	
RY(n+1)E ~ RY(n+1)F	RY(n+7)E ~ RY(n+7)F	Prohibited to use *1	RX(n+1)E ~ RX(n+1)F	RX(n+7)E ~ RX(n+7)F	Prohibited to use *1

**1 The last 2 bits cannot be used for any node settings.*

◆ **When using remote READY flag (default):**

The "n" character used in the following table reflects the address number used for each node by the master node.

Signal Direction: GP -> Master Node			Signal Direction: Master Node -> GP		
Device No.		Signal Name	Device No.		Signal Name
Number of Occupying Nodes			Number of Occupying Nodes		
1 Node	4 Nodes		1 Node	4 Nodes	
RYn0 ~ RYnF	RYn0 ~ RY(n+6)F	User area	RXn0 ~ RXnF	RXn0 ~ RX(n+6)F	User area
RY(n+1)0 ~ RY(n+1)A	RY(n+7)0 ~ RY(n+7)A	Prohibited to use	RX(n+1)0 ~ RX(n+1)A	RX(n+7)0 ~ RX(n+7)A	Prohibited to use
RY(n+1)B	RY(n+7)B	Remote READY flag *1	RX(n+1)B	RX(n+7)B	
RY(n+1)C ~ RY(n+1)F	RY(n+7)C ~ RY(n+7)F	Prohibited to use	RX(n+1)C ~ RX(n+1)F	RX(n+7)C ~ RX(n+7)F	

**1 The remote READY flag will turn ON during GP start-up. When turning the GP's power ON, when resetting the hardware, and when the GP is ready for operation, the remote READY flag will turn ON. Even while the GP's power is ON, the remote READY flag will turn OFF during offline operation and while performing initial processing. Use this feature for the interlock circuit used when reading and writing data from the CC-Link master node.*

■ Relationship between Master and Individual Nodes

The following data explains the GP's remote register allocation.
The remote register will vary depending on the number of occupying nodes (1 node/ 4 nodes) set.

The "m" and "n" characters used in the following table reflect the address numbers used for each node by the master node.

Data Direction	Address		Area
	Number of Occupying Nodes		
	1 Node	4 Nodes	
GP -> Master node	RWwm ~ RWwm+3	RWwm ~ RWwm+F	Data write area
Master node -> GP	RWrn ~ RWrn+3	RWrn ~ RWrn+F	Data read area

■ Remote Enput Allocation via Master Node

Data can be written from the GP to these areas.

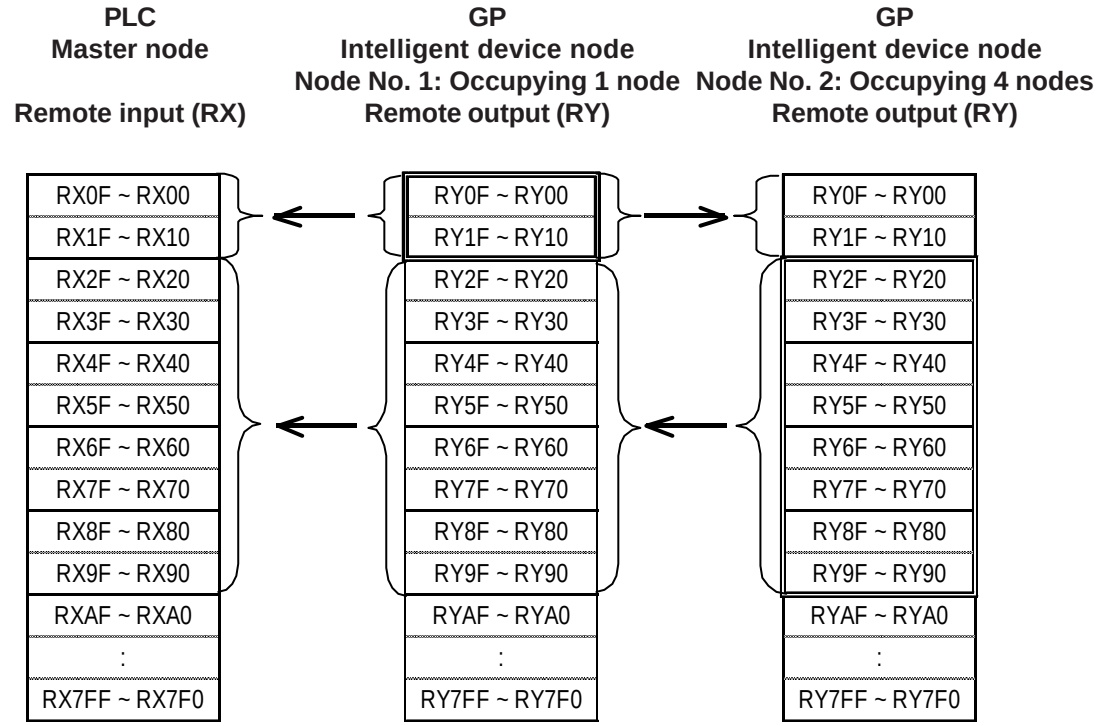

■ Remote Output Allocation via Master Node

Data can be written from the GP to these areas.

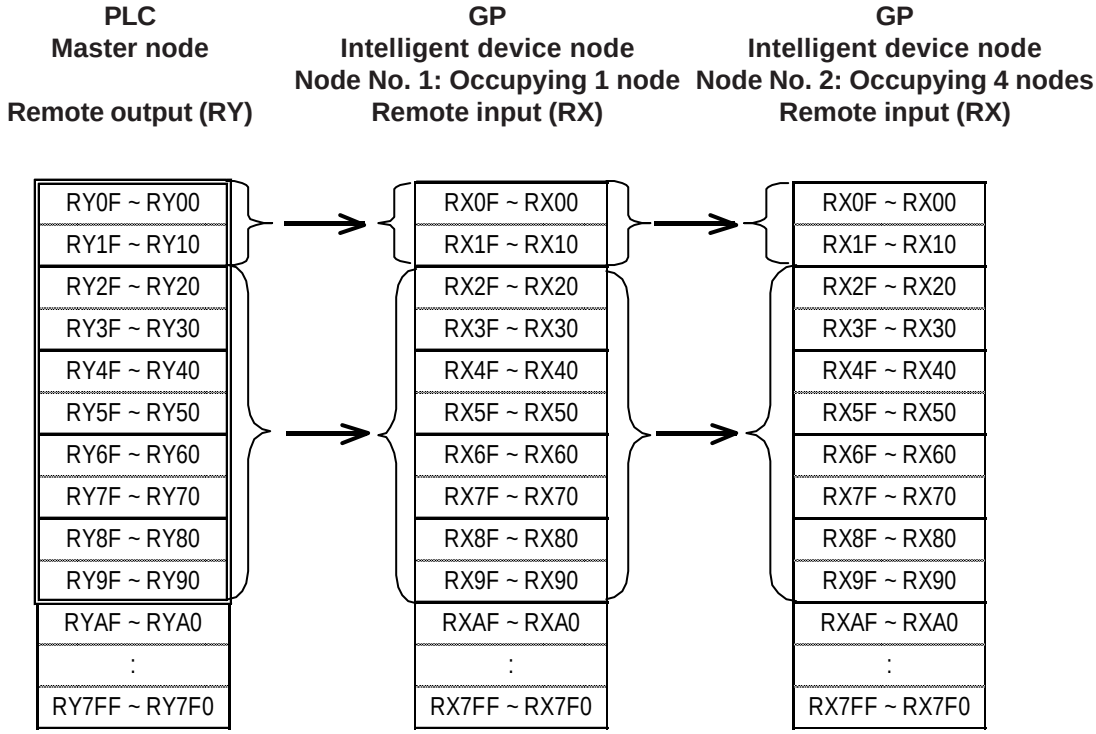

■ Remote Register (data read area) Allocation via Master Node

Data can be written from the GP to these ▭ areas.

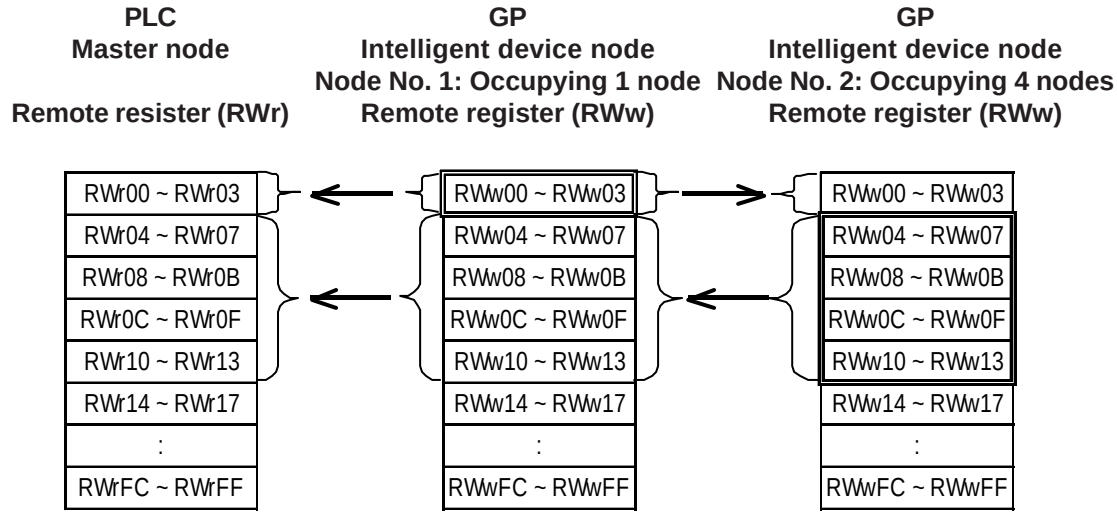

■ Remote Register (data write area) allocation via Master Node

Data can be written from the GP to these ▭ areas.

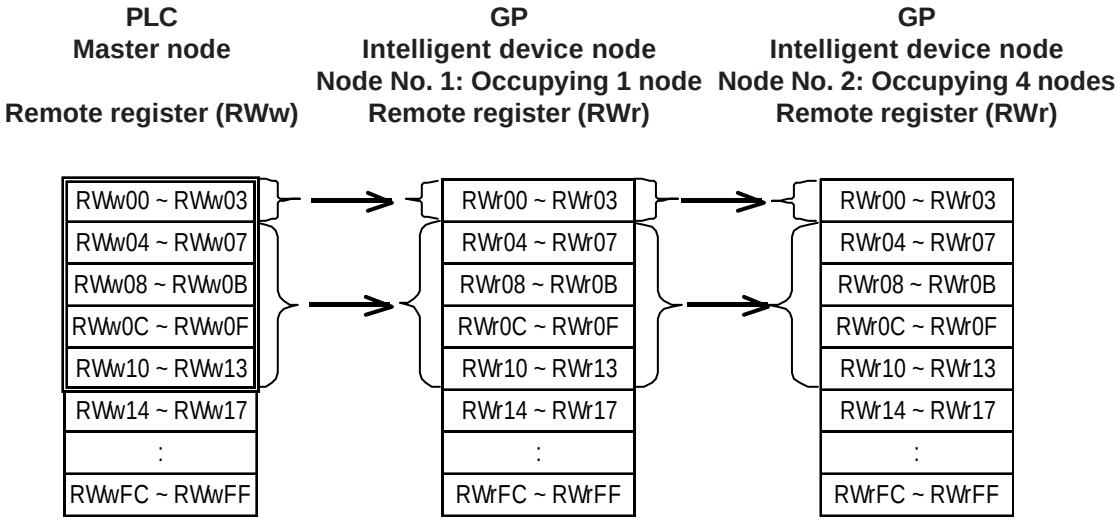

9.3.4 Environment Setup

The following table shows Digital's recommended PLC and GP communication settings.

■ MELSEC-A/QnA/Q Series

GP Settings		PLC (Master Node CC-Link Unit) Settings	
Baud Rate	156kbps	Baud Rate Setting Switch	0 (156kbps)
No. of Occupyable Nodes	1	Node Information Settings	*1
Node No.	1	Node Information Settings	*1
Data Input Status	Clear	————	————
Remote READY flag	Not used	————	————
————	————	Node No. Setting Switch	0 (master)
————	————	Mode Setting Switch	0 (online)
————	————	Condition Setting Switch	All OFF

**1 The A Series requires a ladder program to enter the CC-Link settings.*

Reference *Refer to 9.3.4 Environment Setup, Sample Ladder*

- *The QnA/Q Series' CC-Link settings are entered via entering the network parameter settings on the ladder program.*
- *For more detailed information about ladder program settings, refer to Mitsubishi Electric [AJ61BT11/A1SJ61BT11] Unit CC-Link System Master and Local Unit User's Manual (Details), [AJ61QBT11/A1SJ61QBT11] Unit CC-Link System Master and Local Unit User's Manual (Details), or [QJ61BT11] Unit CC-Link System Master and Local Unit User's Manual (Details)'s [Parameter Settings] section.*

Note:

- *Be sure to set the master node number to "0". (Use the rotary switch to set the master node unit's node number setting switch.)*
- *To assign other nodes, the Mitsubishi ladder logic program's the network parameter settings feature is required (CC-Link).*

■ Sample Ladder Program

The following is a sample ladder used when performing communication via the structure shown below:

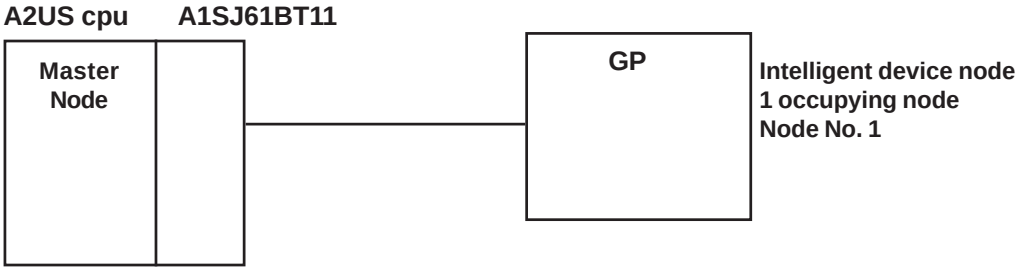


```
      X0          X0F
 ---/|  |------------|   |------------------------------------------------------------ [ PLS  L300 ] ----  X0: Unit problem  XF: Unit ready
    L300
-----|   |------------------------------------------------------------------------------ [ SET  L301 ] ----  Unit parameter setting command
    L300
-----|   |------------------------------------------------------------------------------ [ MOV  K1  D0 ] ----  No. of units connected: 1
            |                                                                                (excluding the master node)
            |------------------------------------------------------------------------ [ MOV  K7  D1 ] ----  Retry frequency: 7
            |
            |------------------------------------------------------------------------ [ MOV  K1  D2 ] ----  No. of Automatic return function: 1
            |
            |------------------------------------------------------------------ [ TO  H0  H1  D0  K3 ] ----  Stores D0 to D2 in buffer memory H1
            |
            |------------------------------------------------------------------------ [ MOV  K0  D3 ] ----  Operation performed at CPU
            |                                                                                down: 0 ( stop )
            |------------------------------------------------------------------ [ TO  H0  H6  D3  K1 ] ----  Stores D3 in buffer memory H6
            |
            |------------------------------------------------------------------------ [ MOV  H2101  D4 ] ----  GP node type: 2 No. of occupying
            |                                                                                nodes: 1 Node No. : 1
            |------------------------------------------------------------------ [ TO  H0  H20  D4  K1 ] ----  Stores D4 in buffer memory H20
            |
            |------------------------------------------------------------------------------ [ RST  L301 ] ----  Unit parameter settings completed
   M9038
-----|   |------------------------------------------------------------------------------------ [ SET  Y0 ] ----  Unit refresh command
      X0          X0F
 ---/|  |------------|   |------------------------------------------------------------------ [ PLS  L302 ] ----  X0: Unit problem  XF: Unit ready
    L302
-----|   |------------------------------------------------------------------------------------ [ SET  L303 ] ----  Data link activation command
    L303
-----|   |------------------------------------------------------------------------------------ [ SET  Y6 ] ----  Data link activation request
      X6
-----|   |------------------------------------------------------------------------------------ [ RST  L303 ] ----  Data link activation request flag OFF
            |
            |------------------------------------------------------------------------------ [ RST  L303 ] ----  Data link activation normally completed
      X7
-----|   |------------------------------------------------------------------ [ FROM  H0  H668  D50  K1 ] ----  Error code read when data link activation
            |                                                                                is abnormally completed
            |------------------------------------------------------------------------------ [ RST  Y6 ] ----  Data link activation normally request flag
OFF
            |
            |------------------------------------------------------------------------------ [ RST  L303 ] ----  Data link activation abnormally completed
```

■ GP Settings

Enter the GP settings used for CC-Link communication, via the following screens. Use either GP screen editor software or GP offline menu to enter the number of occupying nodes, GP's node number, and baud rate.

◆ Operating Environment Menu

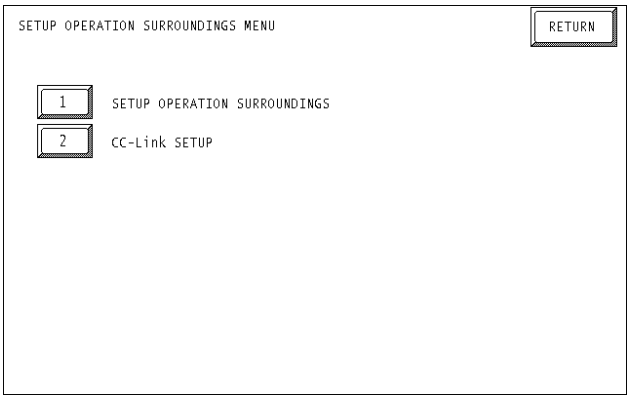

◆ Operating Environment Settings

Select [1 PLC SETUP] from the operating environment menu and enter each setting.

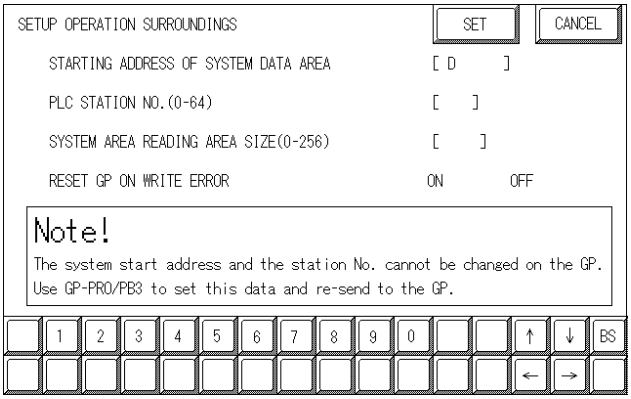

STARTING ADDRESS OF SYSTEM DATA AREA *1

the first address from which the system area begins to be allocated.

PLC Node No. (1 to 64) *1

the PLC node number to which the system area is allocatecd.

SYSTEM AREA READING AREA SIZE (0-256)

Enter the sysytem area's reading area size.

RESET GP ON DATA WRITE ERROR

Select the data write operation status when a data write error occurs. (Applicable only for GP77R Seried)

**1 This setting cannot be changed with GP's OFFLINE mode.*

When changing the setting, perfom with [GP System Setting] of GP-Pro/PB III.

◆ CC-Link Settings

Select [2 CC-Link SETUP] from the operating environment menu and enter each setting.

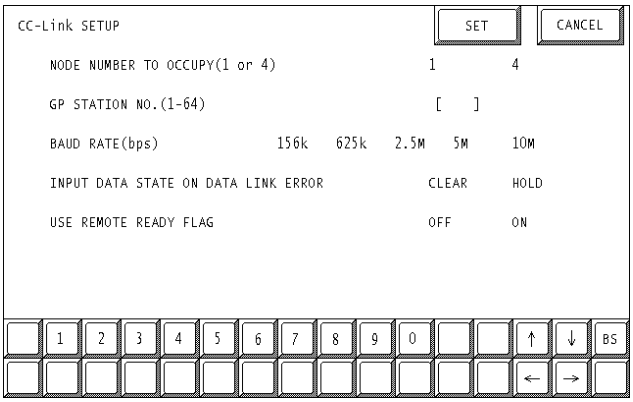

No. of Occupying Nodes (1 or 4)

Select the number of nodes that the GP occupies.

GP Node No. (1 to 64)

Enter the GP's node number.

Baud Rate (156 kbps to 10 Mbps)

Enter the communication baud rate.

Input Data Status Used for Abnormal data Link (Clear or Retained)

Enter the input data status used when a problem occurs on data link.

Remote READY Flag

Select if the remote READY flag is used.

For more detailed information about the remote READY flag, Reference refer to 9.3.3 supported Device; Remote Input /Out put Signal from Individual to Master Nodes.

◆ GP Screen Editor Software Settings

Enter the necessary data via [GP System Settings][Mode Settings][Options].

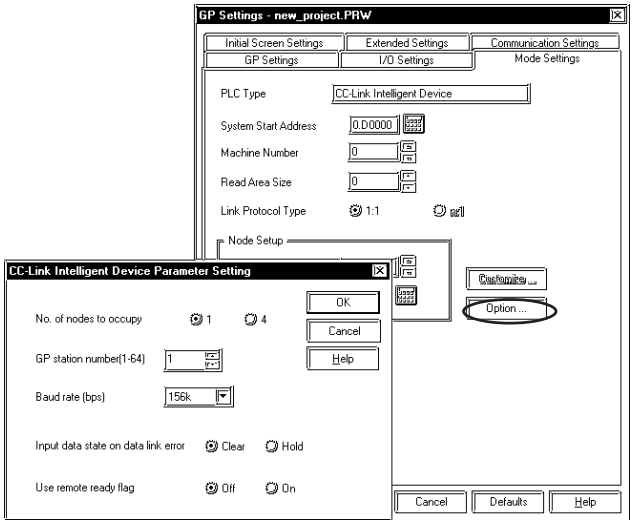

9.3.5 Error Codes

■ PLC Error Codes

The error codes specific to the PLC will appear on the GP screen's left bottom, as follows:

Host Communication Error (02::**:##)".**

The "**" characters indicate an error code specific to the PLC (via the 16 system), and the "##" characters indicate the PLC number, on which an error occurred.

<e.g.> When "0xB802" is returned from node No. 1, the error code will appear as follows:

Host Communication Error (02:B8:02:01)

Note: **For more detailed information about error codes, refer to the following Mitsubishi Electric's manuals:**

AJ61BT11/A1SJ61BT11 Unit CC-Link System Master and Local Unit User's Manual (Details)

AJ61QBT11/A1SJ61QBT11 Unit CC-Link System Master and Local Unit User's Manual (Details)

QJ61BT11 Unit CC-Link System Master and Local Unit User's Manual (Details)

◆ Error Codes Specific to GP CC-Link Intelligent Device

The error codes specific to the GP's internal CC-Link intelligent device nodes are as follows. Each error code will appear on the GP screen's left bottom, in a format of "Host Communication Error (02:**)".

The "**" characters reflect one of the following error codes.

Error Code	Error
01	The check sum did not match during initialization.
02	The check sum reverse did not match during initialization.
03	Data link normal activation was not completed after initialization.
04	Shared memory read request was failed.
05	Shared memory write request was failed.
06	There was no response from the firmware during initialization.
11	An incorrect device code was designated during device read.
12	The transient command procedure was not normally completed during device read.
21	An incorrect device code was designated during device write.
22	The transient command procedure was not normally completed during device write.
23	Out of the internal memory buffer area
30	Undefined error (This type of error usually never occurs and can occur due to program bugs, memory destruction, etc.)